MP800地基示意图

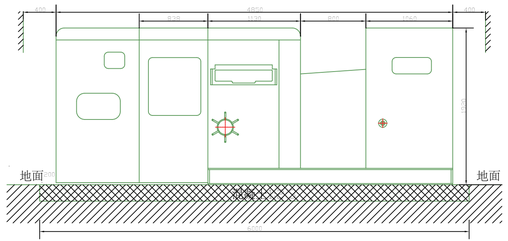

MP800平面示意图

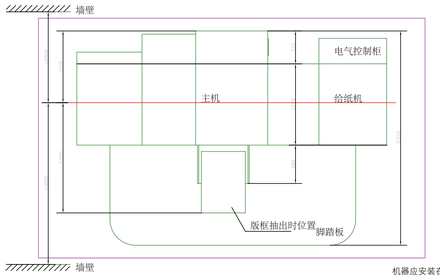

机器应安装在混凝土的地基上，并留出合适的操作维修和保养机器的空间。安装机床时要将模切部分调成水平，并用薄铁板垫实。水平仪的精度等级为：0.05mm或0.1mm。

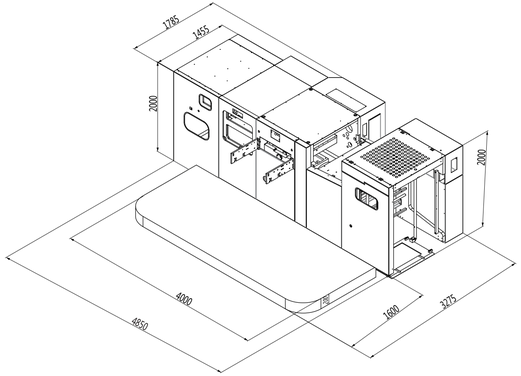

MP800立体示意图

销售热线电话:18732560691

河北玉田兴业印刷机械有限公司
原唐山玉印印刷机械有限公司

地址：河北省玉田县无终西街1166号
电话：0315-6163591 / 7679008
传真：0315-6166314 / 7679007
网址：www.china-yuyin.com
邮箱：info@china-yuyin.com
配件热线电话13754502969

HEBEI YUTIAN XINGYE PRINTING MACHINERY CO., LTD.
TANGSHAN YUYIN PRINTING MACHINERY CO., LTD.

Add：NO.1166 Wuzhong West Street, Yutian, Hebei, China
Tel：0086-315-6163591 / 7679008
Fax：0086-315-6166314 / 7679007
Web：www.china-yuyin.com
E-mail：info@china-yuyin.com

上海玉印国际贸易有限公司
SHANGHAIYUYIN INTERNATIONAL TRADING CO.,LTD.

Postal Add:room 2403 Jincheng Mansion 511 Tianmu Xi Road. Shanghai 200070.P.r.china
Tel:(0086)021-63536567 63537129 63537130 63173900 63530603
Fax:(0086)021-63538343
Web：www.shanghai-yuyin.com

由于技术改良，制造商保留权利修改有关参数及功能，恕不另行通知。
In the interest of product improvement the manufacturer reserves the right to change specifications and features without notice.



MP800
自动清废模切机

SEMI AUTOMATIC DIECUTTING
& CREASING MACHINE

河北玉田兴业印刷机械有限公司
（原唐山玉印印刷机械有限公司）
销售热线电话:18732560691

YU YIN

技术参数 Specifications

项目	MODLE	MP800
最大输纸尺寸(mm)	Max.paper size(mm)	800 × 620mm
最小输纸尺寸(mm)	Min.paper size(mm)	360 × 290mm
最大模切尺寸(mm)	Max. die-cutting size (mm)	790 × 610mm
最高工作速度(s/h)	Max. cutting speed (s/h)	8000s/h
最高排废速度(s/h)	Max. stripping speed (s/h)	6500
最大工作压力(T)	Max. working pressure	200T
模切精度（mm）	Die-cutting precision	≤ ± 0.1
纸张加工厚度(mm)	Sheet thickness(mm)	纸板(Cardboard) 0.1-1.580-2000 g瓦楞≤4mm
整机重量(T)	Net weight（T）	11T
整机总功率(kw)	Total power(kw)	17.55kw

技术参数如有变更，恕不另行通知

主要用途和特点 Main use and Features

MP800自动全清废模切机具有自动清废模切机功能外，它能在模切生产的同时，排除其所有与包装盒无关的废屑和废边（除叼纸边外），大大提高了生产效度，尤其适用于复杂的纸盒烟包的自动模切清废，使纸盒生产达到了合理化。

Our new model of MP800 not only has the traditional functions--the automatic stripping and the die-cutting, the second-stripping system, which can clean up all litters and wasteful edges (except the gripper edge)around the package box while die-cutting, especially suitable for complicated cigarette-package . This new second-stripping system can height efficiency to rationalize the production for the package box.

技术特点 Features

- 清废框电动提升，装有中心定位装置，操作容易，极大缩短准备时间。
- 清废系统采用三框联动结构清废动作更加合理。解决了排废过程中高速及散版的问题。
- 独特叼口分离系统使废边分离更加准确可靠，并方便模切和全清废功能转化。
- 专业厂商生产的高精度间歇机构，保证机器运转平稳。

- It is easy to operate it because the stripping frame can be lifted electricly and it also has the center-positioning system to shorten the preparation time largely.
- The stripping system adopts three-frame linkage structure to make stripping much more rational and meanwhile, it solves problems for the high-speed and loosen-version during the stripping.
- The unique gripper-mouth separation-system makes the wasteful edge separate effectively and is also convenient for shifting between the die-cutting and stripping.
- The high-precision cam structure guarantees the machine to run stably and smoothly, which is produced by the professional manufacturer.



MP800
自动清废模切机
SEMI AUTOMATIC DIECUTTING
& CREASING MACHINE



MP800
自动清废模切机
SEMI AUTOMATIC DIECUTTING
& CREASING MACHINE

细部特征 Detail Characteristics


安全系统 Safety system


电器部 Electrical unit


给纸部 Feeding unit


活动平台 Movable Platform

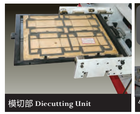
模切部 Diecutting Unit

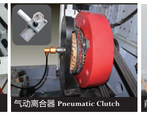
气动离合器 Pneumatic Clutch


前规定位系统 Front Lay



收纸部 Delivering Unit


输送部 Transportation Unit


牙排 Gripper Bar


清废部 Stripping Unit

MP800
自动清废模切机
SEMI AUTOMATIC DIECUTTING
& CREASING MACHINE

●安全系统 Safety System
整机通过德国莱恩公司CE安全认证，配备高档电路安全模块，达到四级安全防护等级。采用先进算法，执行速度快，工作稳定。
The machine with four degree safety class has got CE certificate of high-speed and stable performance.

●电器部 Electrical Unit
采用进口电器元件、人性化按钮板布局，操作更加方便。
配有恒温装置使电器元件工作更加可靠，延长使用寿命。
Imported electronic elements and panels with humanization control layout to ensure easy operation.
Equipped constant Temperature Devices to ensure reliable working and prolong service life.

●给纸部 Feeding Unit
龙门式小车预装纸设计使给纸部操作更加快捷方便；飞达头防撞装置；采用强力型四吸四送高速飞达；吸纸头可配合纸张的变形情况调整各个吸嘴角度，保证送纸稳定顺畅。
The design of double column type pre-stack unit ensures convenient and efficient operation. Feeder with collision-prevention device. Adopt high-speed feeder with adjustable strong type suckers to guarantee stable and smooth paper feeding.

●活动平台 Movable Platform
活动平台采用独特的铸造结构和特殊加工工艺保证平整度和平面度，缩短压力调整时间；增加润滑油冷却系统保证压力恒定。
Unique cast structure and specific working process ensure evenness and flatness and pressure-regulating time. Oil cooling system ensures constant pressure.

●模切部 Diecutting Unit
蜗轮、蜗杆、曲轴采用本公司独特加工工艺，大大提高设备核心部件使用寿命；气动锁版系统使其操作方便；单根牙排定位可做前后微调补偿，达到产品加工要求。
Worm shaft, worm wheel and crankshaft with unique working process greatly improve the service life of core components. Single gripper bar can be fine adjusted to achieve processing requirement.

●气动离合器 Pneumatic Clutch
采用进口器件，降低噪声，减少气动冲击；采用进口气动控制器件运行更加可靠，安全。
Imported components to lower noise and pneumatic impact for stable and safe running.

●前规定位系统 Front Lay
前规定位可四点单独微调以适合不同纸张加工要求；独特电动调整装置在收纸部可实现调版，使前规调整更加快捷准确；人机界面直接显示数值使操作更加直观。
The front lay can be individually adjusted by four site for different paper processing requirement. Unique electrically pressure-regulating device realizes palte regulating in delivery unit, ensuring convenient and efficient front lay regulating. Values visually displayed on man-machine interface .

●收纸部 Delivering Unit
收纸部增加防压脚装置设备更加安全；独特的纸张减速毛刷设计，纸张停止更加平稳；牙排传动链条浮动张紧装置，延长链条使用寿命；气动取样装置，方便开机过程中随时查看样张。
Add foot-pressing preventer for further safety. Unique deceleration hairbrush ensures paper stopping stably. Tension device for drive chain of gripper bar prolongs the gripper bar's service life. Pneumatic sampling device for convenient sampling at any time with the machine running.

●输送部 Transportation Unit
输纸部采用链条传动，运行平稳，送纸相对稳定可靠；采用气弹簧辅助动力使其操作更加方便；可调整纸边前前规减速装置，更有利于高速薄纸定位；侧定位采用推、拉两用侧规装置，切换方便。
Drive chain adopted in feeding unit to ensure stable run and reliable paper feeding. Gas spring for easy and convenient operation. Adjustable reduction unit for paper to front lay, helps to thinner paper positioning at high speed. Side lay with dual purpose for side positioning can be easily switched.

●牙排、链条 Gripper Bar Chain
牙排采用特殊结构和材料，转动惯量低，冲击小；特殊叼纸牙结构，叼纸更加有力牢靠，在高速下保证良好加工精度；采用优化牙排运动轨迹和改进型运行曲线使其牙排运行更加平稳，准确；采用进口链条提高链条使用寿命。
The gripper of special structure and material to guarantee low moment of inertia and impact. Special gripper structure to ensure stronger gripper force and working accuracy at high speed. Adopt optimized motion trail and improved motion curve to ensure stable and accurate running of gripper bar. Imported chain to prolong service life.

●选配部件 Optional
加热装置
Heating Device

●清废部 Stripping Unit
三框联动清废装置，动作协调，精度准确；上、中、下清废框采用中心定位结构，操作方便；采用电动控制提升装置，使对版更加方便；优化凸轮曲线使其高速清废更加平稳可靠。
Three-frame linkage structure cooperate coordinately with accurate precision. Three frames located in the upper, the middle and the lower adopt the center-positioning system to operate easily. Adopting electric control lifting system makes the plate rectify much more convenient.